Susan Combs
Texas Comptroller of Public Accounts

Facility Preliminary Energy Assessments and Recommendations

Prepared by:

ESA ENERGY SYSTEMS ASSOCIATES, Inc

100 East Main Street, Suite 201

Round Rock, Texas 78664

(512) 258-0547

Cypress Fairbanks Independent School District

December 6, 2010

ESA-Energy Systems Associates, Inc.
F-4882

SECO
State Energy Conservation Office

Table of Contents

1.0 EXECUTIVE SUMMARY: 3
2.0 ENERGY ASSESSMENT PROCEDURE: 5
3.0 ENERGY PERFORMANCE INDICATORS: 6
4.0 RATE SCHEDULE ANALYSIS: 8
ELECTRICITY PROVIDER: 8
5.0 CAMPUS DESCRIPTIONS: 9
6.0 ENERGY RECOMMENDATIONS 10
1.0 ISOLATE UNUSED EQUIPMENT 10
2.0 ELIMINATE SIMULTANEOUS HEATING AND COOLING PROCESSES 11
3.0 ELIMINATE UNECESSARY HEATING PROCESSES 12
4.0 RE-PROGRAM LEAD/LAG CHILLER SEQUENCES 15
7.0 RECOMMENDATIONS 16
A. MAINTENANCE AND OPERATIONS PROCEDURES 16
8.0 FINANCIAL EVALUATION 23
9.0 GENERAL COMMENTS 24
APPENDICES 25
APPENDIX I - SUMMARY OF FUNDING AND PROCUREMENT OPTIONS FOR CAPITAL EXPENDITURE PROJECTS 26
SUMMARY OF FUNDING OPTIONS FOR CAPITAL EXPENDITURE PROJECTS 27
SUMMARY OF PROCUREMENT OPTIONS FOR CAPITAL EXPENDITURE PROJECTS 28
APPENDIX II - ELECTRIC UTILITY RATE SCHEDULE 33
APPENDIX IV - PRELIMINARY ENERGY ASSESSMENT SERVICE AGREEMENT 38
APPENDIX V - TEXAS ENERGY MANAGERS ASSOCIATION (TEMA) 40

1.0 EXECUTIVE SUMMARY:

This **Energy Efficient Partnership Service** is provided to public school districts and hospitals as a portion of the state's ***Schools/ Local Government Energy Management Program***; a program sponsored by the **State Energy Conservation Office (SECO)**, a division of the **State of Texas Comptroller of Public Accounts**.

Program Administrator:	Juline Ferris
Phone:	512-936-9283
Address:	State Energy Conservation Office LBJ State Office Building 111 E. 17th Street Austin. Texas 78774

The service assists these public, non-profit institutions to take basic steps towards energy efficient facility operation. Active involvement in the partnership from the entire administration and staff within the agencies and institutions is critical in developing a customized blueprint for energy efficiency for their facilities.

In February 2010, **SECO** received a request for technical assistance from Roy Sprague, Superintendent of Facilities and Construction for Cy Fair I.S.D. **SECO** responded by sending ESA **Energy Systems Associates, Inc.**, a registered professional engineering firm, to prepare this preliminary report for the school district. This report is intended to provide support for the district as it determines the most appropriate path for facility renovation, especially as it pertains to the energy consuming systems around the facility. It is our opinion that significant decreases in annual energy costs, as well as major maintenance cost reductions, can be achieved through the efficiency recommendations provided herein.

This study has focused on energy efficiency and systems operations. To that end, an analysis of the utility usage and costs for **Cy Fair ISD,** (hereafter known as CFISD) was completed by ESA **Energy Systems Associates, Inc**., (hereafter known as *Engineer*) to determine the annual energy cost index (ECI) and energy use index (EUI) for each campus or facility. A complete listing of the Base Year Utility Costs and Consumption is provided in Section 3.0 of this report.

Following the utility analysis and a preliminary consultation with *Mr. Glen Rhoden*, Energy Manager for CFISD, a walk-through energy analysis was conducted throughout the campus. Specific findings of this survey and the resulting recommendations for both operation and maintenance procedures and cost-effective energy retrofit installations are identified in Section 6.0 of this report.

We estimate that as much as **$126,769** may be saved annually if all recommended projects are implemented. The estimated installed cost of these projects should total approximately **$840,051**, yielding an average simple payback of **6-3/4** years.

SUMMARY:	IMPLEMENTATION COST	ESTIMATED SAVINGS	SIMPLE PAYBACK
HVAC ECRM #1	$602,300	$58,400	10-1/3 Years
HVAC ECRM #2	$ 2,000	$ 500	4 Years
Lighting ECRM #1	$ 16,200	$ 3,400	4-3/4 Years
Lighting ECRM #2	$ 57,515	$ 10,457	5-1/2 Years
Controls ECRM #1	$ 162,036	$ 54,012	3 Years
TOTAL PROJECTS	$ 840,051	$ 126,769	6-3/4 Years

The total utility cost for CFISD at the surveyed schools in 2009 was $1,748,853. The projected savings of $126,769 would represent a decrease in utility expenditures for the district of 7.2%. Although additional savings from reduced maintenance expenses are anticipated, these savings projections are not included in the estimates provided above. As a result, the actual Internal Rate of Return (IRR), for this retrofit program has been calculated and shown in Section 7.0 of this report.

Our final "summary" comment is that **SECO** views the completion and presentation of this report as a beginning, rather than an end, of our relationship with CFISD. We hope to be ongoing partners in assisting you to implement the recommendations listed in this report. Please call us if you have further questions or comments regarding your Energy Management Issues.

*ESA Energy Systems Associates, Inc. James W. Brown (512) 258-0547

2.0 ENERGY ASSESSMENT PROCEDURE:

Involvement in this on-site analysis program was initiated through completion of a Preliminary Energy Assessment Service Agreement. This PEASA serves as the agreement to form a "partnership" between the client and the State Energy Conservation Office (SECO) for the purposes of energy costs and consumption reduction within owned and operated facilities. After receipt of the PEASA, an initial visit was conducted by the professional engineering firm contracted by SECO to provide service within that area of the state to review the program elements that SECO provides to school districts and determine which elements could best benefit the district. A summary of the *Partner's* most recent twelve months of utility bills was provided to the engineer for the preliminary assessment of the Energy Performance Indicators. After reviewing the utility bill data analysis and consultation with SECO to determine the program elements to be provided to CFISD, ESA returned to the facilities to perform the following tasks:

1. Develop an accurate definition of system and equipment replacement projects along with installation cost estimates, estimated energy and cost savings and analyses for each recommended project.
2. Develop a prioritized schedule for replacement projects.
3. Developing and drafting an overall Energy Management Policy.
4. Recommend the quality oriented process required in retro-commissioning for achieving, verifying, and documenting the performance of facilities, systems, and assemblies meet defined objectives and design criteria.
5. Providing informal on-site training for building operators and maintenance staff in conjunction with delivery of the Preliminary Assessment to the client.

3.0 ENERGY PERFORMANCE INDICATORS:

In order to easily assess the *Partner's* energy utilization and current level of efficiency, there are two key "Energy Performance Indicators" calculated within this report.

1. Energy Utilization Index

The Energy Utilization Index (EUI) depicts the total annual energy consumption per square foot of building space, and is expressed in "British Thermal Units" (BTUs).

To calculate the EUI, the consumption of electricity and gas are first converted to equivalent BTU consumption via the following formulas:

ELECTRICITY Usage

[Total KWH /yr] x [3413 BTUs/KWH] = _____ BTUs / yr

NATURAL GAS Usage

[Total MCF/yr] x [1,030,000 BTUs/MCF] = _____ BTUs / yr

After adding the BTU consumption of each fuel, the total BTUs are then divided

by the building area.

EUI = [Electricity BTUs + Gas BTUs] divided by [Total square feet]

2. Energy Cost Index

The Energy Cost Index (ECI) depicts the total annual energy cost per square foot of building space.

To calculate the ECI, the annual costs of electricity and gas are totaled and divided by the total square footage of the facility:

ECI = [Electricity Cost + Gas Cost] divided by [Total square feet]

These indicators may be used to compare the facility's current cost and usage to past years, or to other similar facilities in the area. Although the comparisons will not provide specific reasons for unusual operation, they serve as indicators that problems may exist within the energy consuming systems.

THE CURRENT CFISD ENERGY PERFORMANCE INDICATORS:

CYPRESS FAIRBANKS ISD				
CAMPUS	ENERGY UTILIZATION INDEX (EUI) BTUs/sf-year	% ABOVE OR BELOW DISTRICT AVERAGE	ENERGY COST INDEX (ECI) $/sf-year	% ABOVE OR BELOW DISTRICT AVERAGE
Wilson Elementary	49,700	8%	$1.43	14%
Tipps Elementary	55,500	21%	$1.56	25%
Andre Elementary	57,700	26%	$1.62	30%
McFee Elementary	54,100	18%	$1.51	21%
Hopper Middle School	51,700	12%	$1.35	8%
Yeager Elementary	62,500	36%	$1.76	41%
Adam Elementary	51,900	13%	$1.54	23%
Birkes Elementary	50,800	11%	$1.45	16%
Willbern Elementary	53,600	17%	$1.53	22%
Lee Elementary	49,900	9%	$1.44	15%
Metcalf Elementary	51,200	11%	$1.47	18%
Francone Elementary	50,400	10%	$1.53	22%
Average Value (Surveyed Schools):	53,250		$1.52	
District Average:	45,970		$1.25	

Cy Fair ISD purchases electricity from TXU Energy. The transmission and distribution utility is Centerpoint Energy. The rate schedule analysis for the district is shown below. A copy of the rate schedule is included in Appendix II.

4.0 RATE SCHEDULE ANALYSIS:

ELECTRICITY PROVIDER:

RETAIL ELECTRIC PROVIDER: Strategic Energy

Contract price: $0.0495 per kWh (Note: This is a new contract price – the majority of the analyzed billing cycle was at a higher contract price.)

TRANSMISSION AND DISTRIBUTION UTILITY: Centerpoint Energy

Electric Rate: Secondary Service > 10 kVA

I.	TRANSMISSION AND DISTRIBUTION CHARGES:		
	Customer Charge	=	$5.27 per meter
	Metering Charge	=	$116.89 per IDR meter
	Transmission System Charge	=	$1.4709 per 4CP kW
	Distribution System Charge	=	$3.118137 per Billing kVA
II.	SYSTEM BENEFIT FUND	=	$0.000657 per kVA
III.	TRANSITION CHARGES		
	Transition Charge 1	=	$0.621/kW
	Transition Charge 2	=	$1.181063/kW
	Transition Charge 3	=	$0.148887/kW
IV.	NUCLEAR DECOMMISSIONING CHARGE	=	$0.008909 per Billing kVA
V.	TRANSMISSION COST RECOVERY FACTOR	=	$0.420902/NCP kVA
VI.	COMPETITIVE METERING CREDIT	=	- $15.69/month
VII.	RIDER UCOS Retail Credit	=	-$ 0.016314 per 4CP
VIII.	ADVANCED METERING SYSTEM SURCHARGE	=	$ 3.16/month
IX.	Accumulated Deferred Federal Income Tax Credit	=	$ 0.061131 / kVA
X.	GROSS RECEIPTS TAX	=	As per incorporation rules.

Average Savings for consumption = $0.0495/kWh + $0.000657/kWh = $0.050157/kWh
Average Savings for demand = $1.4709 + $3.118137 + $0.621 + $1.181063 + $0.148887 + $0.008909 + $0.420902 - $0.016314 + $0.061131 = $7.01/kVA**

** This number is a generalization of average cost per kW because the rate schedule from Centerpoint utilizes three (3) different types of demand for the calculation of the utility bill:

1. NCP kVA: Peak demand during 15 minute interval of current billing cycle
2. 4CP kVA: Average demands of June, July, August and September of previous calendar year; usually only applied to IDR metered accounts
3. Billing kVA: Ratchet demand representing higher of two calculations: 80% of peak demand in last 11 months or current NCP kVA

5.0 CAMPUS DESCRIPTIONS:

Cy Fair ISD consists of seventy educational campuses which are located in and around northwest Harris County, Texas. Of those campuses, the energy survey focused on twelve locations:

Facility	Year originally Constructed	Approximate Square Footage	Basic HVAC Cool/Heat	Basic HVAC Air Distribution	Basic Lighting System Description	Basic Control System Description
Metcalf ES	1990	92,800	Water cooled reciprocating chiller / NG boiler	MZVAV with HW reheat	T8	Automated Logic
Hopper MS	2007	226,508	Water cooled centrifugal chiller / NG boiler	Double Duct with non-powered terminal units	T8	Trane
Lee ES	2005	98,424	Water cooled reciprocating chiller / NG boiler	MZVAV with HW reheat	T8	Trane
McFee ES	2007	107,075	Water cooled centrifugal chiller / NG boiler	MZVAV with HW reheat	T8	Trane
Wilbern ES	1992	92,024	Water cooled reciprocating chiller / NG boiler	MZVAV with HW reheat	T12	Automated Logic
Andre ES	2006	101,692	Water cooled centrifugal chiller / NG boiler	MZVAV with HW reheat	T8	Trane
Birkes ES	2003	108,024	Water cooled reciprocating chiller / NG boiler	Double Duct with non-powered terminal units	T8	Automated Logic
Tipps ES	2003	101,000	Water cooled centrifugal chiller / NG boiler	MZ Double Duct with Non-powered Terminal Units	T8	Automated Logic
Adam ES	1972	78,376	Water cooled reciprocating chiller / NG boiler	MZ Triple Duct with Non-powered Terminal Units	T8	Automated Logic
Wilson ES	1983	84,992	Water cooled centrifugal chiller / NG boiler	MZ VAV with powered fan terminal box and hw reheat	T8	Automated Logic
Yeager ES	1975	80,258	Water cooled reciprocating chiller / NG boiler	MZ double duct with	T8	Automated Logic
Francone ES	1978	82,838	Water cooled centrifugal chiller / NG boiler	MZ Double Duct with Non-powered Terminal Units	T8	Automated Logic

The selection of campuses represented a mix of older and newer campuses which allows for comparison of energy conservation strategies between older and newer designs as well as offering the district the ability to extrapolate recommendations for these facilities to other campuses in the district operating with similar equipment or under similar conditions.

6.0 ENERGY RECOMMENDATIONS

1.0 ISOLATE UNUSED EQUIPMENT

The following picture is a screenshot of Birkes ES, Monday April 5, 12:37pm showing Chiller #1 OFF, but primary CHWP-1 and CWP-1 operating. The change in temperature (ΔT) gained by the chilled water loop through "isolated" chiller is indicated as 0.13°F. The primary chilled water pump and condenser water pump should be OFF when Chiller-1 is not required. Similarly, Chiller-1 should be isolated from the chilled water loop when it is not required to eliminate heat gain in the chilled water supply. The survey revealed the primary chilled water pump to be 5hp and the condenser water pump to be 7-1/2 hp. This represents 15.1 amps of motors (approximately 12kW) that can be turned off, plus reduce the cooling requirement of the operational chiller as the chilled water supply is no longer absorbing heat as it is passed through an isolated chiller. *We recommend the district turn off and isolate all equipment that is not required to condition the building at its current load requirement.*

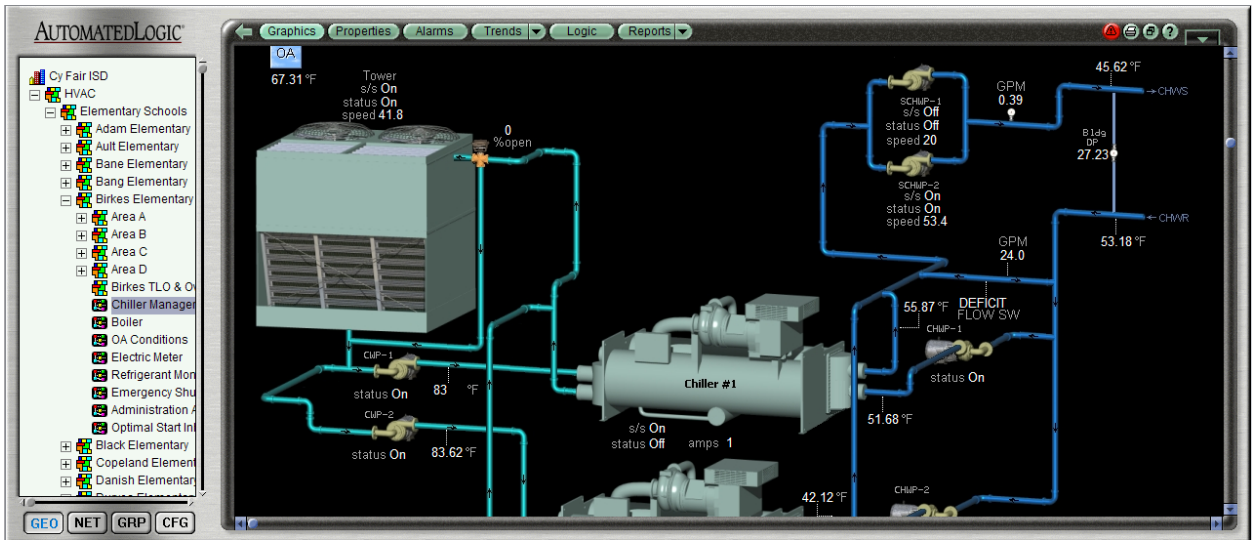

2.0 ELIMINATE SIMULTANEOUS HEATING AND COOLING PROCESSES

The following screenshots illustrate that CFISD has some simultaneous heating and cooling processes that can be eliminated and energy efficiency improved. The graphic for OAU-1 at 12:56pm, April 5, shows Outside Air temperature of 67°F and the HW coil is 24% open heating OA to 87.93. The chilled water coil is 25% open to allow the chilled water coil to cool the same air to 53.93°F for dehumidification purposes. In this air handler configuration, the HW coil is designed to be used for freeze protection; using the hot water to warm the air before the chilled water coil cools constitutes the simultaneous heating and cooling process that can be eliminated. We recommend closing the hot water coil at the OAHU unless freeze protection programming has been engaged. Any re-heat necessary for the system should be done at the VAV boxes (and likely none will be required at these OA conditions).

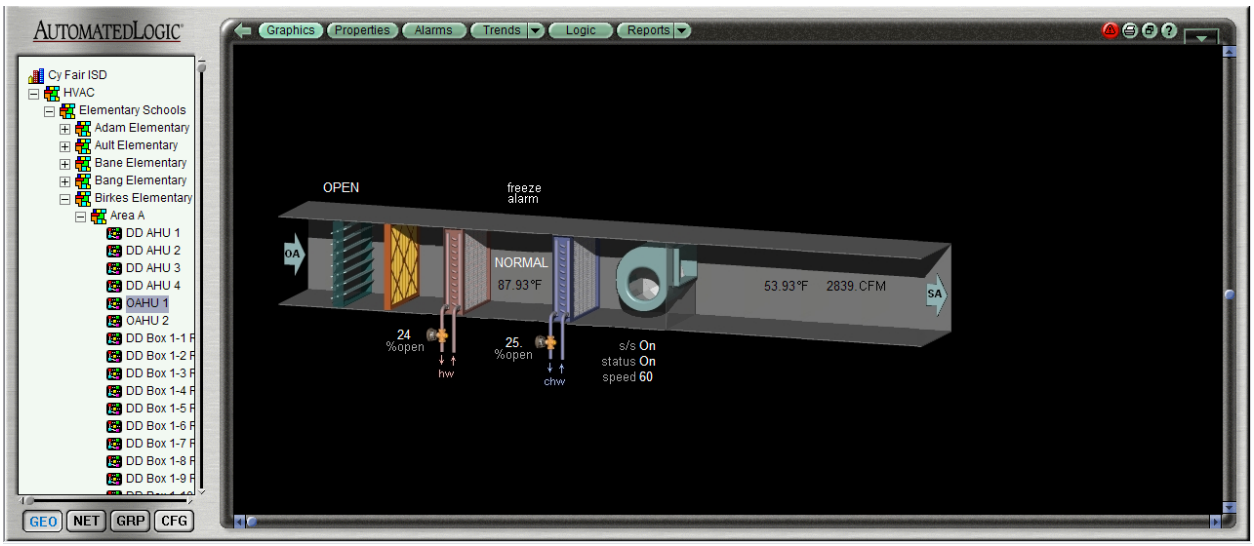

Further exploration revealed why the system was trying to operate as it was. The OA sensor at Birkes is apparently faulty and giving false information to the rest of the system. Other facilities in the district indicate the OA temperature at the time to be 81°F. Not only is the sensor incorrect, but incorrect at a point below the programmed temperature to turn off the boiler manager (programmed at 70°F), which would have eliminated the simultaneous heating and cooling condition described above.

While the faulty outside air sensor issue was determined to be the cause for the simultaneous heating and cooling in this case, there remains frequent opportunity for the simultaneous heating and cooling to occur when the temperature sensor is operating appropriately. *We recommend the district re-program freeze protection hot water coils to only operate as outside air temperatures are 50°F or less, as well as repairing the OA sensor at Birkes ES.*

3.0 ELIMINATE UNECESSARY HEATING PROCESSES

The following screenshots illustrate that CFISD has some unnecessary heating processes occurring within the double duct systems operated at many of the district's campuses. In this screenshot of AHU-3, 1323 hours 4-5-10, the return air temperature is 67.31°F and we know the faulty outside air temperature is telling the system that the OA temperature is 68°F. The HW coil in the double duct unit is heating the warm deck to 73.5°F. Even if the sensor was correct, using the hot water system to heat the air from 67° to 74° is unnecessary in a double duct system because the air is blended at the terminal boxes with cold deck air. If the hot deck is allowed to become neutral, with return air and mixed outside air only, the cold deck can be allowed to modulate warmer (if proper dehumidification is occurring) and offer not only hot water system savings, but chilled water system savings as well.

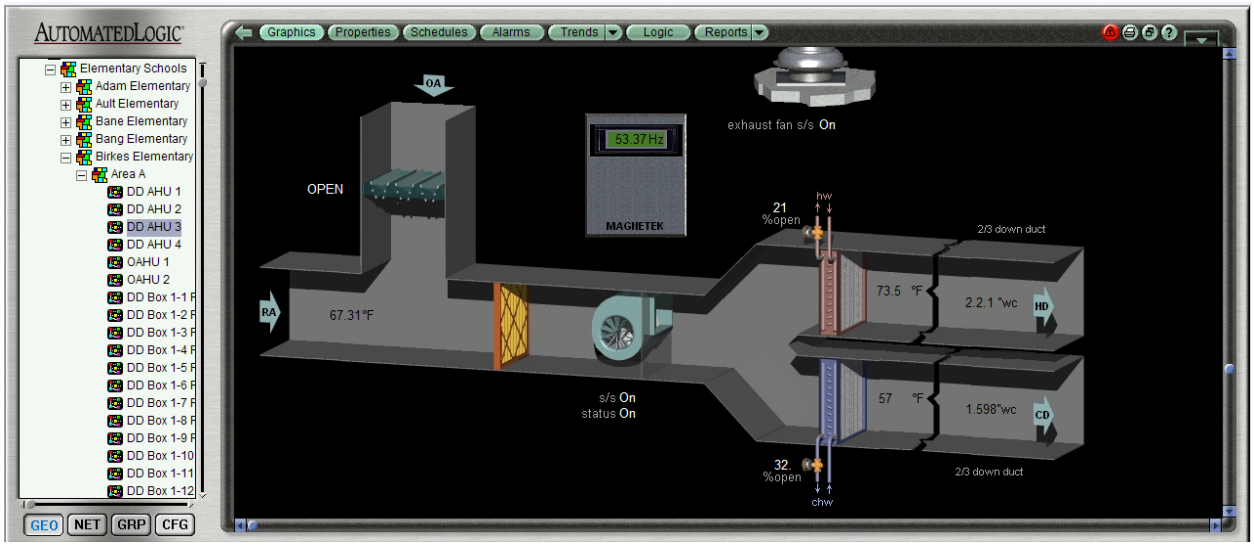

We recommend the heating sequences for cooling season programmed conditions be amended to allow the hot deck to be used as a neutral deck when outside air and humidity conditions allow.

If the concerns for humidity issues prohibit the district from consideration of the neutral air deck model, an alternate method utilizing a heat exchanger and the condenser water system can replace heat supplied from the boiler during moderate and warm weather conditions.

It is common for cooling towers in the Houston area to dissipate heat from the condenser water stream to result in an 11 degree ΔT (96°F to 85°F).

The same drop in temperature can be realized with a plate heat exchanger and the resulting condenser water be bypassed from the tower directly to the sump. The heat can be exchanged to the hot water system that is currently being used for reheat purposes during dehumidification. The resulting "hot water" can be used in lieu of the boiler which could remain off during the summer months.

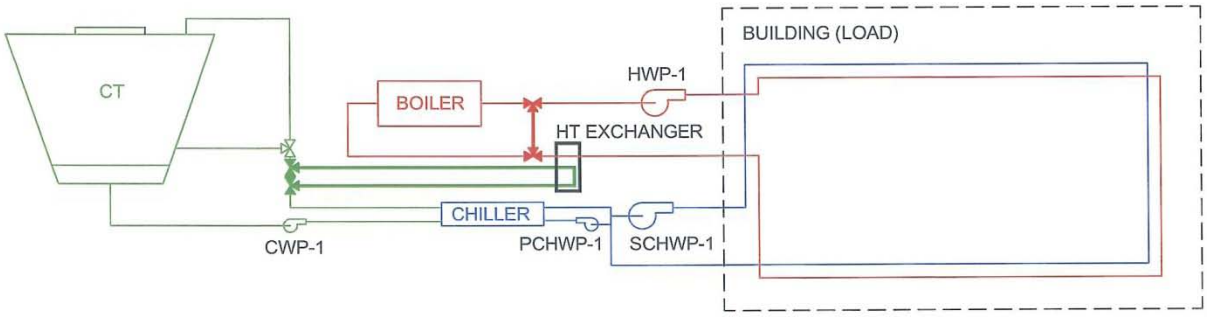

At Francone ES in CFISD for instance, the existing condenser water loop is capable of producing 435 gpm of condenser water. Available heat from the condenser water may be calculated as follows: $Q_{cond} = m\ c_p\ (t_{in} - t_{out}) =$

Where:

m = mass flow rate of water, 435 gpm * 8.33 lb/gal * 60 min/hr = 217,413 lb/hr

C_p = specific heat of water, 1.0 BTU / lb*°F

Q_{cond} = 217,413 lb/hr * 1.0 BTU / lb*°F * (96°F – 85°F) = 2,391,543 BTU/hr

Assuming re-heat may be accomplished with 98°F hot water loop temperatures, the HW loop temperatures are approximately room temperature when not in use (78°F), and that the condenser water loop energy may be transferred to the hot water loop side of the heat exchanger at 95% efficiency:

$_{Qhw\ loop}$ = 2,391,543 BTU / hr * 0.95 = 2,271,966 BTU / hr

And the flow rate = $m_{hwloop} = Q_{hwloop} / c_p\ (t_{in} - t_{out})$

= 2,271,966 BTU/hr / [1.0 BTU/lb*°F * (98°F-78°F)]

= 113,598 lb / hr

Converting to gpm, 113,598 lb/hr / (8.33 lb/gal * 60 min/hr) = 227 gpm of 98°F hot water

As we look at a psychometric chart, we can plot the maximum outside air condition for moisture in Houston (88°F dry bulb, 81°F wet bulb, 79°F dew point and 149.2 grains per lb_m). We will label this point "outside air". Assuming return air is 78°F and 60%RH (labeled "return air") and the "Cooling Coil" point is 52°F saturated (this point results from the 44°F chilled water coil reducing the moisture in the ventilation air from 149.2 grains / lb_m to 78 grains / lb_m at peak load conditions), we can calculate what the 227 gpm of 98°F air will do for the supply air stream.

Using $q_a = 1.1 * Q_a * \Delta t$, where

q_a = 2,271,966 BTU / hr

Qa = flow rate of air

Δt = desired rise in temperature, 13°F, to create 65°F supply air temperature

Then, $Q_a = q_a / 1.1*\Delta t$ = 2,271,966 BTU/hr / [1.1*13°F] = 158,879 CFM of available 65°F air

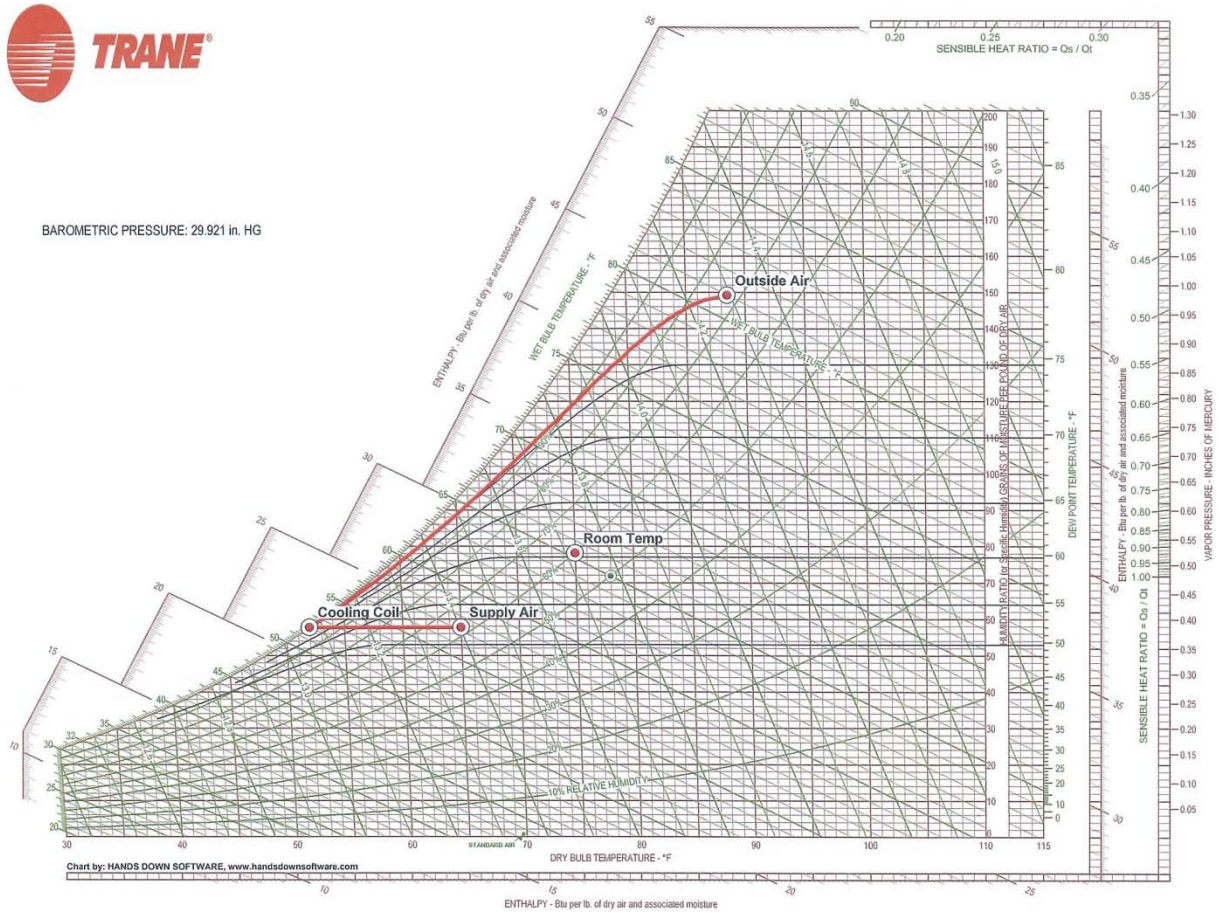

4.0 RE-PROGRAM LEAD/LAG CHILLER SEQUENCES

The Yeager ES Chiller Plant Manager programming indicates Chiller-4, a 60-ton air cooled chiller with an energy requirement of 1.35 kVA/ton [four compressors at Running Load Amps (RLA) of 25.4, times 460V, times 1.732 (phase factor), all divided by the 60-ton nominal cooling capacity] is programmed as lead. In the screenshot, it is being supplemented by the water cooled Chiller-1 at part-load conditions. At full load, the 160-ton water cooled chiller operates at 0.87 kVA/ton. The 60-ton air cooled chiller is drawing 79 amps, or 78% of full load; 78% of 60-tons is 46.8 tons. Chiller-1 is operating at 95 amps, or 55% load; leaving 87 available tons of cooling capacity for Chiller-1 unused at the time of the screenshot. Given the parasitic appurtenances (Cooling Tower, Condenser Water Pumps and Chilled Water Pumps), running Chiller-1 to include the 47 tons being conditioned by Chiller-4 would save significant amounts of energy (81 kVA) and maintain current comfort conditions.

Given the cost analysis for chiller operation shown below, Chiller-4 should be relegated to tertiary status as the chiller assigned to loads smaller than minimum flow requirements allow in the water-cooled chillers. *We recommend re-sequencing the chillers so that Chiller-1 and Chiller-2 alternate lead for low load conditions, Chiller-1 operate alone for all conditioning loads up to 160 tons, and Chiller-4 only operate to prevent Chiller-1 and Chiller-2 from tripping out on low-flow alarms for the smallest of loading conditions.*

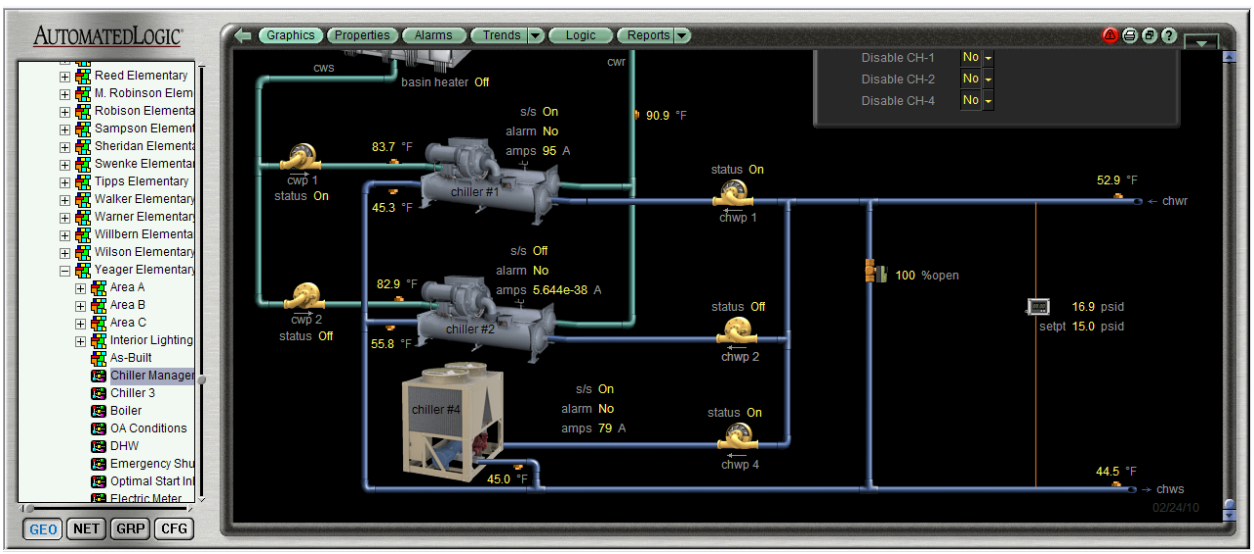

	Volts	Amps - Circuit 1	kVA - Circuit 1	kVA/ton Circuit 1	Amps - Circuit 2	kVA - Circuit 2	kVA/ton Circuit 2	Amps - Circuit 3	kVA - Circuit 3	kVA/ton Circuit 3	Amps - Circuit 4	kVA - Circuit 4	kVA/ton Circuit 4	Total kVA/ton
Chiller-1 (160T)	460	71.2	56.73	0.98	103.1	82.14	0.81							0.87
Cooling Tower	460		1.47	-	-	2.12	-							
CDP-1 (10 hp)	460		7.46	-	-	-	-							
CHWP-1 (10 hp)	460	-	7.46	-	-	-	-							
		TOTAL	73.12	1.26		84.26	0.83							0.98
Chiller-2 (106T)	460	44.3	35.29	0.93	79.2	63.10	0.93							0.93
Cooling Tower	460		0.86	-	-	1.53								
CDP-2 (10 hp)	460		7.46	-	-	-								
CHWP-2 (10 hp)	460		7.46	-	-	-								
		TOTAL	51.08	1.34		64.63	0.95							1.09
Chiller-4 (60T)	460	25.4	20.24	1.35	25.4	20.24	1.35	25.4	20.24	1.35	25.4	20.24	1.35	1.35
CHWP-4 (7.5 hp)			5.6	-		5.6	-		5.6	-		5.6	-	
		TOTAL	25.84	1.72	TOTAL	25.84	1.72	TOTAL	25.84	1.72	TOTAL	25.84	1.72	1.72
Note: Cooling Tower is single cell - Chiller -1 is 60% of total water cooled chilling capacity, therefore 60% of CT amperage assigned to CH-1 and 40% amperage to CH-2														
All electrical loads are assumed at full cooling capacity for each circuit; i.e. no IPLV have been taken into consideration.														

7.0 RECOMMENDATIONS

A. MAINTENANCE AND OPERATIONS PROCEDURES

HVAC

- Incease frequency of filter changeout
- Isolate unused equipment
- Insulate hot water piping at water heater

Lighting

- Remove one lamp in all 3-lamp corridor fixtures
- Turn off all light fixtures where daylighting adequate
- Initiate "Turn Off lights Program"
- Turn off all exterior lights during the day
- Minimize lamp operation when unoccupied

Building Envelope

- Replace damaged or missing weatherstripping at exterior doors

Controls

- Program computer monitors to turn off
- Eliminate simultaneous heating and cooling
- Eliminate unecessary heating processes
- Re-program lead/lag chiller sequencing
- Relocate thermostats/sensors
- Reset HW loop temperature to 120°

Maintenance and Operation procedures are strategies that can offer significant energy savings potential, yet require little or no capital investment by the district to implement. Exact paybacks are at times difficult to calculate, but are typically always less than one year. The difficulties with payback calculation are often related to the fact that the investigation required to make the payback calculation, for example measuring the air gap between exterior doors and missing or damaged weatherstripping so that exact air losses may be determined, is time and cost prohibitive when the benefits of renovating door and weather weatherstripping are well documented and universally accepted.

HVAC M&O-1

At Francone and Lee ESs, it was noted during the survey that the HVAC filters have not been replaced for 6 months. We recommend the filters be replaced at least every 3-4 months to keep the equipment clean and operating efficiently.

HVAC M&O-2

Analyzing the control system for Birkes ES, it was noted that the unused chilled water system components are not isolated from the chilled water loop. Therefore, the chilled water experiences an increase in temperature as it passes through unused equipment. *We recommend installing automated isolation valves as necessary and programming the valves to close and isolate unused equipment from the system.*

HVAC M&O-3

At Francone ES, it was noted that the water heater had missing or damaged hot water pipe insulation. Given that most of the energy losses in a hot water system occur within the water piping, *we recommend the insulation be replaced*.

Lighting M&O-1

At Wilbern ES, it was noted that the corridor light fixtures utilize 3 T8 lamps per fixture. The Illumination Engineering Society of North America (IESNA) recommends school corridors operate with just 10-15 footcandles. The corridors are current 40-45 footcandles, therefore de-lamping the fixtures to 2-lamp fixtures will maintain adequate light levels and offer 29 watts of energy savings for every de-lamped corridor light fixture.

Lighting M&O-2

At many of the campuses, the original architect included windows, skylights or lightwells to supply daylighting to the facilities. The facilities will occasionally also be used at night so there are artificial light fixtures present in these locations for those occasions. Many times, staff turns on all of the light fixtures and may not notice that these areas have been adequately illuminated with natural daylight. The artificial light fixtures in these areas are not necessary during daytime hours and can offer significant energy savings by remaining off during the day. The picture to the right, taken at Lee ES, demonstrates that one or two rows of the linear fluorescent fixtures are not required during the daytime; the sunlight is more than adequate for the window-side of the cafeteria. If training the staff to not turn these fixtures on is unsuccessful, then the district may choose to install photocells that will automatically turn fixtures off as the natural daylight levels are adequate.

Lighting M&O-3

Throughout many of the campuses, there were areas where the rooms were unoccupied, but the lighting system was operational. Studies have shown that linear fluorescent fixtures, the most common fixtures found in public schools, offer energy savings to the district as soon as 23 seconds after the last person leaves the room. This calculation includes allowances for the startup current required to turn the fixtures back on and any minimal life cycle reduction that occurs from cycling the ballasts more frequently than if they are left operating throughout the

day. *We recommend the district get the students and teachers cooperating in a "Turn off the Lights" program* or consider installing occupancy sensors to automatically turn fixtures off in unoccupied areas.

Lighting M&O-4

There were several campuses, namely Lee, Yeager, Adam and Francone ESs, where exterior lights were operating throughout the daytime hours. *We recommend the district repair the photocell or timeclock that should be controlling the fixtures*, or get the fixtures under photocell control, to keep them from operating throughout the day.

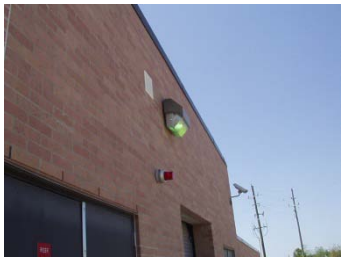

Lighting M&O-5

As we have recommended fixtures be turned off in unoccupied areas, we do recognize that turning off fixtures is, at times, unwarranted for safety reasons as teachers and students may pass through areas of the building without officially occupying them. This is often found in cafeterias that serve as areas of passage throughout the day between different zones of the facility. *In these cases, we recommend the fixtures be dual-switched (multiple ballasts in the fixtures controlling lamps individually) with 1/2 to 2/3 of the lamps turned off during the unoccupied period, yet with a portion of the lamps operating to offer safe passage through the space. We recommend this practice at Adam ES, where 2 of the 4-lamps in the cafeteria fixtures may be turned off, but still allow safe passage through the cafeteria to the Music Room and PTO Office.*

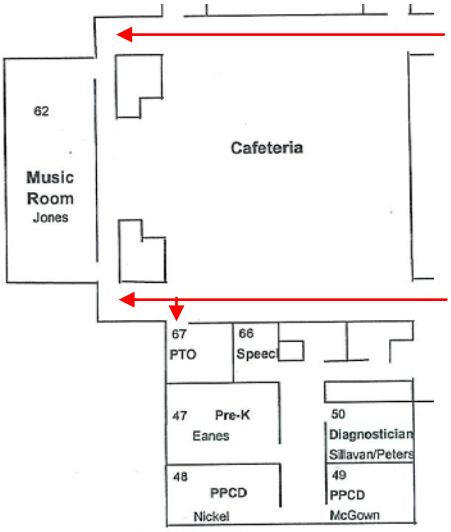

Envelope M&O

As discussed previously, calculating paybacks for missing or damaged weatherstripping is tedious and serves little purpose. It was noted there were several exterior doors around the district that suffered from missing or absent weatherstripping and *we recommend that these situations be addressed as the opportunity arises.*

Controls M&O-1

It was noted during the survey that many of the facility computer monitors are operating with screen savers instead of powering off during periods of non-use. Even modern and efficient monitors consume 180 watts of power when operating. Significant energy savings is available if all monitors are programmed to turn off when they are not in use.

Controls M&O-2

As discussed in the text in Section 6.0, there are situations within the district's controls and operation sequences that unnecessary simultaneous heating and cooling processes are occurring. *We recommend the district re-program the control parameters to minimize the periods that simultaneous heating and cooling occur.*

Controls M&O-3

Also discussed in the text, there are some occasions where the heating process can be eliminated entirely. Utilizing return air in the hot deck as a neutral temperature deck, as well as installing heat exchangers and utilizing the condenser water for re-heat, can eliminate the need for boiler operation during warmer periods altogether.

Controls M&O-4

The relatively small capacity air cooled chillers at each school are currently programmed as the lead chiller in the central system control sequences. As the calculations described above indicate, the air cooled chiller is not necessarily the least expensive option for the district's cooling needs, even in low-load conditions. *We recommend re-scheduling the lead/lag sequences to limit the air cooled chiller operation to loads that the water cooled units cannot unload to handle properly.*

Controls M&O-5

There were some instances noted where the location of the thermostat or space temperature sensor was inappropriate for the room conditions. At McFee ES for instance, many of the classroom sensors are located adjacent to the windows in the classrooms and sample artificially warm temperatures as the sunlight heats the sensor. This condition promotes the sensor to call for cooling beyond the actual room cooling setpoint which wastes energy by over-conditioning the space. Relocating the sensor to an area immediately below the return air duct intakes will promote the optimum temperature sampling in the space.

Controls M&O-6

At McFee and Tipps ESs, the Kitchen domestic hot water loop temperature was found to be set at about 150°F. With transition away from dishwashing at the Kitchen (the district has chosen to use paper plates and plastic utensils), the hot water loop only has to be set to 120°F which will reduce the energy required to heat the water.

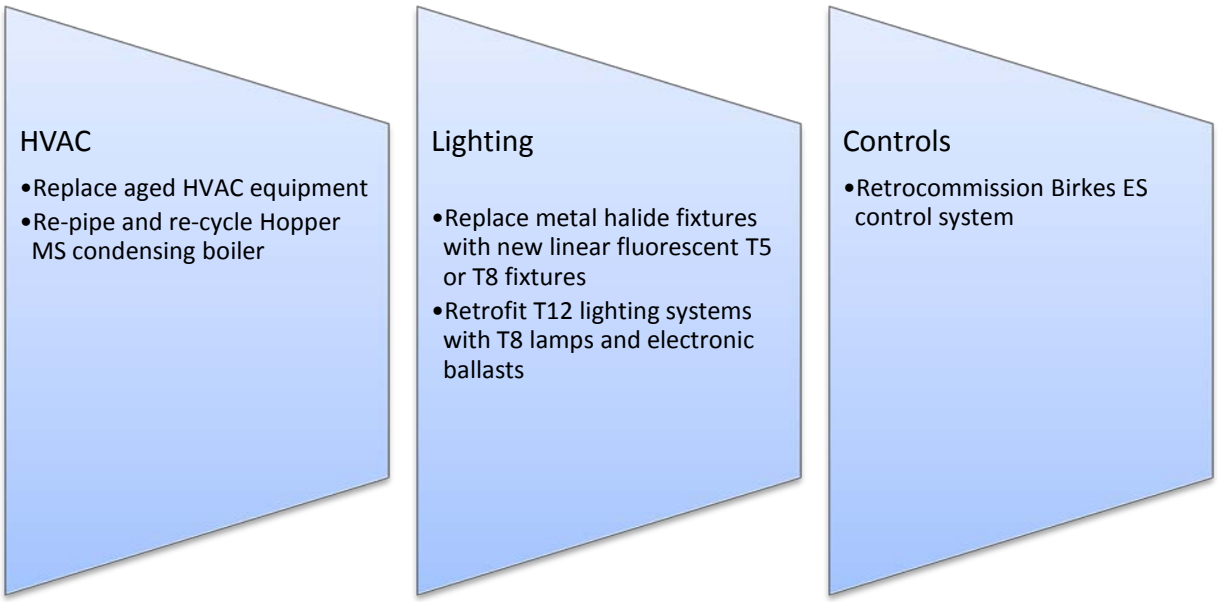

HVAC ECRM-1

There was some HVAC equipment noted during the surveys to be reaching or surpassing its anticipated useful life span. The equipment is noted in the following chart:

Facility	*Equipment*	*Quantity*	*Current Estimated Age*	*Estimated Useful Life Span*
Metcalf ES	Chiller – 80 ton	3	1990	20 Years
	1° CHW Pumps	3	1990	20 Years
	2° CHW Pumps	2	1990	20 Years
	Condenser Pumps	3	1990	20 Years
	Cooling Tower	1	1990	20 Years
WIlbern ES	Chiller	3	1992	20 Years
	2° CHW Pumps	3	1992	20 Years
	1° CHW Pumps	3	1992	20 Years

Replacing this equipment is anticipated to cost:

Total estimated installed cost: $602,300

Total estimated annual energy savings: $ 58,400

Estimated Simple Payback: 10-1/2 Years

HVAC ECRM-2

The condensing boiler at Hopper MS (Patterson-Kelly unit) is more efficient than the Sellers boiler that is also serving Hopper MS. On the day of the survey, outside air temperature was 70°F. For these or warmer outside air conditions, the condensing boiler has the capacity to meet the heating water load requirements and should be delegated as the lead boiler in order to turn off the less efficient Sellers boiler. Currently, the condensing boiler is piped into the outlet HW piping of the Sellers unit. To operate as the lead boiler, the condensing boiler would function better if it was piped into the inlet piping of the Sellers unit. *We recommend the district renovate the condensing boiler piping and re-program it as the lead boiler for appropriate outside air conditions.*

Installing this measure is anticipated to cost:

Total estimated installed cost:	$2,000
Total estimated annual energy savings:	$ 500
Estimated Simple Payback:	4 Years

Lighting ECRM-1

The gymnasiums at Wilbern, Yeager, McFee and Francone ESs have twelve to fifteen 250-watt metal halide fixtures that currently stay on throughout the day because the long re-strike issue that is inherent to metal halide fixtures encourages staff to leave them on even when the space is unoccupied. We recommend replacing each 250-watt metal halide fixture with a new high-bay, 4-lamp, T5 linear fluorescent fixture. These fixtures consume less energy per fixture, but also do not have the re-strike issue and can be turned off when the space is unoccupied.

Installing this measure at all four campuses is anticipated to cost:

Total estimated installed cost:	$16,200
Total estimated annual energy savings:	$ 3,400
Estimated Simple Payback:	4-3/4 Years

Lighting ECRM-2

The lighting system at Wilbern ES is predominantly T12 linear fluorescent fixtures. Retrofitting these fixtures with T8 lamps and electronic ballasts will produce approximately 20% more light from the fixtures while consuming about 18% less energy. This measure will also help the district to comply with Senate Bill 300, legislation that requires school districts install the most efficient lamps and ballasts possible in their existing fixtures.

Installing this measure at Wilbern is anticipated to cost:

Total estimated installed cost:	$57,515
Total estimated annual energy savings:	$10,457
Estimated Simple Payback:	5-1/2 Years

Controls ECRM-1

The controls system at Birkes ES demonstrates many of the issues described in Sections 5 and 6 of the text. Retro-commissioning the control system would eliminate all of the issues discussed.

Implementing this measure at Birkes is anticipated to cost:

Total estimated installed cost:	$162,036
Total estimated annual energy savings:	$ 54,012
Estimated Simple Payback:	3 Years

If all of the ECRM projects described in Section 7.0 were implemented at the same time, the cost analysis would be:

Total estimated installed cost:	$840,051
Total estimated annual energy savings:	$126,769
Estimated Simple Payback:	6-3/4 Years

8.0 FINANCIAL EVALUATION

Financing of these projects may be provided using a variety of methods as Bond Programs, municipal leases, or state financing programs like the SECO LoanSTAR Program.

If the project was financed with in-house funds, the internal rate of return for the investment would be as follows:

Proposal:	Perform recommended ECRMs			
Assumptions:				
1. Equipment will last at least 15 years prior to next renovation				
2. No maintenance expenses for first five years (warranty period)				
3. $1000 maintenance expense next 5 years; $5000 after year 10				
4. Savings decreases 5% per year after year 5				
Cash Flow	**Project Cost**	**Project Savings**	**Maintenance Expense**	**Net Cash Flow**
Time 0	($840,051.00)		0	($840,051)
Year 1		$ 126,769.00	0	$126,769
Year 2		$ 126,769.00	0	$126,769
Year 3		$ 126,769.00	0	$126,769
Year 4		$ 126,769.00	0	$126,769
Year 5		$ 126,769.00	0	$126,769
Year 6		$ 120,430.55	($1,000)	$119,431
Year 7		$ 114,092.10	($1,000)	$113,092
Year 8		$ 107,753.65	($1,000)	$106,754
Year 9		$ 101,415.20	($1,000)	$100,415
Year 10		$ 95,076.75	($1,000)	$94,077
Year 11		$ 88,738.30	($5,000)	$83,738
Year 12		$ 82,399.85	($5,000)	$77,400
Year 13		$ 76,061.40	($5,000)	$71,061
Year 14		$ 69,722.95	($5,000)	$64,723
Year 15		$ 63,384.50	($5,000)	$58,385
			Internal Rate of Return	**10.01%**

More information regarding financial programs available to CFISD can be found in:

APPENDIX I: SUMMARY OF FUNDING AND PROCUREMENT OPTIONS

9.0 GENERAL COMMENTS

This report has been prepared for the exclusive use of our client for specific application to the project discussed and has been prepared in accordance with generally accepted engineering practices. All estimations provided in this report were based upon information provided to ESA by the District and their respective utility providers. While cost saving estimates have been provided, they are not intended to be considered a guarantee of cost savings. No guarantees or warranties, either expressed or implied, are intended or made. Changes in energy usage or utility pricing from those provided will impact the overall calculations of estimated savings and could result in different or longer payback periods.

APPENDICES

APPENDIX I - SUMMARY OF FUNDING AND PROCUREMENT OPTIONS FOR CAPITAL EXPENDITURE PROJECTS

SUMMARY OF FUNDING OPTIONS FOR CAPITAL EXPENDITURE PROJECTS

Several options are available for funding retrofit measures which require capital expenditures.

LoanSTAR Program:

The Texas LoanSTAR program is administered by the State Energy Conservation Office (SECO). It is a revolving loan program available to all public school districts in the state as well as other institutional facilities. SECO loans money at 3% interest for the implementation of energy conservation measures which have a combined payback of eight years or less. The amount of money available varies, depending upon repayment schedules of other facilities with outstanding loans, and legislative actions. Check with Eddy Trevino of SECO (512-463-1876) for an up-to-date evaluation of prospects for obtaining a loan in the amounts desired.

TASB (Texas Association of School Boards) Capital Acquisition Program:

TASB makes loans to school districts for acquiring personal property for "maintenance purposes". Energy conservation measures are eligible for these loans. The smallest loan TASB will make is $100,000. Financing is at 4.4% to 5.3%, depending upon length of the loan and the school district's bond rating. Loans are made over a three year, four year, seven year, or ten year period. The application process involves filling out a one page application form, and submitting the school district's most recent budget and audit. Contact Cheryl Kepp at TASB (512-467-0222) for further information.

Loans on Commercial Market:

Local lending institutions are another source for the funding of desired energy conservation measures. Interest rates obtainable may not be as attractive as that offered by the LoanSTAR or TASB programs, but advantages include "unlimited" funds available for loan, and local administration of the loan.

Leasing Corporations:

Leasing corporations have become increasingly interested in the energy efficiency market. The financing vehicle frequently used is the municipal lease. Structured like a simple loan, a municipal leasing agreement is usually a lease-purchase agreement. Ownership of the financed equipment passes to the district at the beginning of the lease, and the lessor retains a security interest in the purchase until the loan is paid off. A typical lease covers the total cost of the equipment and may include installation costs. At the end of the contract period a nominal amount, usually a dollar, is paid by the lessee for title to the equipment.

Bond Issue:

The Board may choose to have a bond election to provide funds for capital improvements. Because of its political nature, this funding method is entirely dependent upon the mood of the voters, and may require more time and effort to acquire the funds than the other alternatives.

SUMMARY OF PROCUREMENT OPTIONS FOR CAPITAL EXPENDITURE PROJECTS

State Purchasing:
The General Services Commission has competitively bid contracts for numerous items which are available for direct purchase by school districts. Contracts for this GSC service may be obtained from Sue Jager at (512) 475-2351.

Design/Bid/Build (Competitive Bidding):
Plans and specifications are prepared for specific projects and competitive bids are received from installation contractors. This traditional approach provides the district with more control over each aspect of the project, and task items required by the contractors are presented in detail.

Design/Build:
These contracts are usually structured with the engineer and contractor combined under the same contract to the owner. This type team approach was developed for fast-track projects, and to allow the contractor a position in the decision making process. The disadvantage to the district is that the engineer is not totally independent and cannot be completely focused upon the interest of the district. The district has less control over selection of equipment and quality control.

Purchasing Standardization Method:
This method will result in significant dollar savings if integrated into planned facility improvements. For larger purchases which extend over a period of time, standardized purchasing can produce lower cost per item expense, and can reduce immediate up-front expenditures. This approach includes traditional competitive bidding with pricing structured for present and future phased purchases.

Performance Contracting:
Through this arrangement, an energy service company (ESCO) using in-house or third party financing to implement comprehensive packages of energy saving retrofit projects. Usually a turnkey service, this method includes an initial assessment of energy savings potential, design of the identified projects, purchase and installation of the equipment, and overall project management. The ESCO guarantees that the cost savings generated will, at a minimum, cover the annual payment due over the term of the contract. The laws governing Performance Contracting for school districts are detailed in the Texas Education Code, Subchapter Z, Section 44.901. Senate Bill SB 3035, passed by the seventy-fifth Texas Legislature, amends some of these conditions. Performance Contracting is a highly competitive field, and interested districts may wish to contact Eddy Trevino of State Energy Conservation Office, (SECO), at 512-463-1896 for assistance in preparing requests for proposals or requests for qualifications.

Solution Center

How to Finance Your Energy Program

Cost and financing issues are pivotal factors in determining which energy-efficiency measures will be included in your final energy management plan. Before examining financing options, you need to have a reasonably good idea of the measures that may be implemented. For this purpose, you will want to perform cost/benefit analyses on each candidate measure to identify those with the best investment potential. This document presents a brief introduction to cost/benefit methods and then suggests a variety of options for financing your program.

Selecting a Cost/Benefit Analysis Method

Cost/benefit analysis can determine if and when an improvement will pay for itself through energy savings and to help you set priorities among alternative improvement projects. Cost/benefit analysis may be either a simple payback analysis or the more sophisticated life cycle cost analysis. Since most electric utility rate schedules are based on both consumption and peak demand, your analyst should be skilled at assessing the effects of changes in both electricity use and demand on total cost savings, regardless of which type of analysis is used. Before beginning any cost/benefit analyses, you must first determine acceptable design alternatives that meet the heating, cooling, lighting, and control requirements of the building being evaluated. The criteria for determining whether a design alternative is "acceptable" includes reliability, safety, conformance with building codes, occupant comfort, noise levels, and space limitations. Since there will usually be a number of acceptable alternatives for any project, cost/benefit analysis allows you to select those that have the best savings potential.

Simple Payback Analysis

A highly simplified form of cost/benefit analysis is called simple payback. In this method, the total first cost of the improvement is divided by the first-year energy cost savings produced by the improvement. This method yields the number of years required for the improvement to pay for itself.

This kind of analysis assumes that the service life of the energy-efficiency measure will equal or exceed the simple payback time. Simple payback analysis provides a relatively easy way to examine the overall costs and savings potentials for a variety of project alternatives. However, it does not consider a number of factors that are difficult to predict, yet can have a significant impact on cost savings. These factors may be considered by performing a life-cycle cost (LCC) analysis.

Simple Payback

As an example of simple payback, consider the lighting retrofit of a 10,000-square-foot commercial office building. Relamping with T-8 lamps and electronic, high-efficiency ballasts may cost around $13,300 ($50 each for 266 fixtures) and produce annual savings of around $4,800 per year (80,000 kWh at $0.06/kWh). This simple payback for this improvement would be

$$\frac{\$13{,}300}{\$4{,}800/\text{year}} = 2.8 \text{ years}$$

That is, the improvement would pay for itself in 2.8 years, a 36% simple return on the investment (1/2.8 = 0.36).

Life-Cycle Cost Analysis

Life-cycle cost analysis (LCC) considers the total cost of a system, device, building, or other capital equipment or facility over its anticipated useful life. LCC analysis allows a comprehensive assessment of all anticipated costs associated with a design alternative. Factors commonly considered in LCC analyses include initial capital cost, operating costs, maintenance costs, financing costs, the expected useful life of equipment, and its future salvage values. The result of the LCC analysis is generally expressed as the value of initial and future costs in today's dollars, as reflected by an appropriate discount rate.

The first step in this type of analysis is to establish the general study parameters for the

continued

Financing Mechanisms

Capital for energy-efficiency improvements is available from a variety of public and private sources, and can be accessed through a wide and flexible range of financing instruments. While variations may occur, there are five general financing mechanisms available today for investing in energy-efficiency:

- **Internal Funds.** Energy-efficiency improvements are financed by direct allocations from an organization's own internal capital or operating budget.
- **Debt Financing.** Energy-efficiency improvements are financed with capital borrowed directly by an organization from private lenders.
- **Lease or Lease-Purchase Agreements.** Energy-efficient equipment is acquired through an operating or financing lease with no up-front costs, and payments are made over five to ten years.
- **Energy Performance Contracts.** Energy-efficiency measures are financed, installed, and maintained by a third party, which guarantees savings and payments based on those savings.
- **Utility Incentives.** Rebates, grants, or other financial assistance are offered by an energy utility for the design and purchase of certain energy-efficient systems and equipment.

These financing mechanisms are not mutually exclusive (i.e., an organization may use several of them in various combinations). The most appropriate set of options will depend on the size and complexity of a project, internal capital constraints, in-house expertise, and other factors. Each of these mechanisms is discussed briefly below, followed by some additional funding sources and considerations.

Internal Funds

The most direct way for the owner of a building or facility to pay for energy-efficiency improvements is to allocate funds from the internal capital or operating budget. Financing internally has two clear advantages over the other options discussed below – it retains internally all savings from increased energy-efficiency, and it is usually the simplest option administratively. The resulting savings may be used to decrease overall operating expenses in future years or retained within a revolving fund used to support additional efficiency investments. Many public and private organizations regularly finance some or all of their energy-efficiency improvements from internal funds.

In some instances, competition from alternative capital investment projects and the requirement for relatively high rates of return may limit the use of internal funds for major, standalone investments in energy-efficiency. In most organizations, for example, the highest priorities for internal funds are business or service expansion, critical health and safety needs, or productivity enhancements. In both the public and private sectors, capital that remains available after these priorities have been met will usually be invested in those areas that offer the highest rates of return. The criteria for such investments commonly include an annual return of 20 percent to 30 percent or a simple payback of three years or less.

Since comprehensive energy-efficiency improvements commonly have simple paybacks of five to six years, or about a 12 percent annual rate of return, internal funds often cannot serve as the sole source of financing for such improvements. Alternatively, however, internal funding can be used well and profitably to achieve more competitive rates of return when combined with one or more of the other options discussed below.

Debt Financing

Direct borrowing of capital from private lenders can be an attractive alternative to using internal funds for energy-efficiency investments. Financing costs can be repaid by the savings that accrue from increased energy-efficiency. Additionally, municipal governments can often issue bonds or other long-term debt instruments at substantially lower interest rates than can private corporate entities. As in the case of internal funding, all savings from efficiency improvements (less only the cost of financing) are retained internally.

Debt financing is administratively more complex than internal funding, and financing costs will vary according to the credit rating of the borrower. This approach may also be restricted by formal debt ceilings imposed by municipal

policy, accounting standards, and/or Federal or state legislation.

In general, debt financing should be considered for larger retrofit projects that involve multiple buildings or facilities. When considering debt financing, organizations should weigh the cost and complexity of this type of financing against the size and risk of the proposed projects.

Lease and Lease-Purchase Agreements

Leasing and lease-purchase agreements provide a means to reduce or avoid the high, up-front capital costs of new, energy-efficient equipment. These agreements may be offered by commercial leasing corporations, management and financing companies, banks, investment brokers, or equipment manufacturers. As with direct borrowing, the lease should be designed so that the energy savings are sufficient to pay for the financing charges. While the time period of a lease can vary significantly, leases in which the lessee assumes ownership of the equipment generally range from five to ten years. There are several different types of leasing agreements, as shown in the sidebar. Specific lease agreements will vary according to lessor policies, the complexity of the project, whether or not engineering and design services are included, and other factors.

Energy Performance Contracts

Energy performance contracts are generally financing or operating leases provided by an Energy Service Company (ESCo) or equipment manufacturer. The distinguishing features of these contracts are that they provide a guarantee on energy savings from the installed retrofit measures, and they provide payments to the ESCo from the savings, freeing the customer from any need of up-front payments to the ESCo. The contract period can range from five to 15 years, and the customer is required to have a certain minimum level of capital investment (generally $200,000 or more) before a contract will be considered.

Under an energy performance contract, the ESCo provides a service package that typically includes the design and engineering, financing, installation, and maintenance of retrofit measures to improve energy-efficiency. The scope of these improvements can range from measures that affect a single part of a building's energy-using

Types of Leasing Agreements

Operating Leases are usually for a short term, occasionally for periods of less than one year. At the end of the lease period, the lessee may either renegotiate the lease, buy the equipment for its fair market value, or acquire other equipment. The lessor is considered the owner of the leased equipment and can claim tax benefits for its depreciation.

Financing Leases are agreements in which the lessee essentially pays for the equipment in monthly installments. Although payments are generally higher than for an operating lease, the lessee may purchase the equipment at the end of the lease for a nominal amount (commonly $1). The lessee is considered the owner of the equipment and may claim certain tax benefits for its depreciation.

Municipal Leases are available only to tax-exempt entities such as school districts or municipalities. Under this type of lease, the lessor does not have to pay taxes on the interest portion of the lessee's payments, and can therefore offer an interest rate that is lower than the rate for usual financing leases. Because of restrictions against multi-year liabilities, the municipality specifies in the contract that the lease will be renewed year by year. This places a higher risk on the lessor, who must be prepared for the possibility that funding for the lease may not be appropriated. The lessor may therefore charge an interest rate that is as much as 2 percent above the tax-exempt bond rate, but still lower than rates for regular financing leases. Municipal leases nonetheless are generally faster and more flexible financing tools than tax-exempt bonds.

Guaranteed Savings Leases are the same as financing or operating leases but with the addition of a guaranteed savings clause. Under this type of lease, the lessee is guaranteed that the annual payments for leasing the energy-efficiency improvements will not exceed the energy savings generated by them. The owner pays the contractor a fixed payment per month. If actual energy savings are less than the fixed payment, however, the owner pays only the small amount saved and receives a credit for the difference.

How to Finance Your Energy Program *continued*

Bulk Purchasing. Large organizations generally have purchasing or materials procurement departments that often buy standard materials in bulk or receive purchasing discounts because of the volume of their purchases. Such organizations can help reduce the costs of energy-efficiency renovations if their bulk purchasing capabilities can be used to obtain discounts on the price of materials (e.g., lamps and ballasts). While some locales may have restrictions that limit the use of this option, some type of bulk purchasing can usually be negotiated to satisfy all parties involved.

Project Transaction Costs. Certain fixed costs are associated with analyzing and installing energy measures in each building included in a retrofit program. Each additional building, for example, could represent additional negotiations and transactions with building owners, building analysts, energy auditors, equipment installers, commissioning agents, and other contractors. Similarly, each additional building will add to the effort involved in initial data analysis as well as in tracking energy performance after the retrofit. For these reasons, it is often possible to achieve target energy savings at lower cost by focusing only on those buildings that are the largest energy users. One disadvantage with larger buildings is that the energy systems in the building can be more difficult to understand, but overall, focusing on the largest energy users is often the most efficient use of your financial resources.

Direct Value-Added Benefits. The primary value of retrofits to buildings and facilities lies in the reduction of operating costs through improved energy-efficiency and maintenance savings. Nevertheless, the retrofit may also directly help address a variety of related concerns, and these benefits (and avoided costs) should be considered in assessing the true value of an investment. A few examples of these benefits include the improvement of indoor air quality in office buildings and schools; easier disposal of toxic or hazardous materials found in energy-using equipment; and assistance in meeting increasingly stringent state or Federal mandates for water conservation. Effective energy management controls for buildings can also provide a strong electronic infrastructure for improving security systems and telecommunications.

Economic Development Benefits. In addition to direct savings on operating costs and the added-value benefits mentioned above, investments in energy-efficiency can also support a community's economic development and employment opportunities. Labor will typically constitute about 60 percent of a total energy investment, and about 50 percent of equipment can be expected to be purchased from local equipment suppliers; as a result, about 85 percent of the investment is retained within the local economy. Additionally, funds retained in urban areas will generally be re-spent in the local economy. The Department of Commerce estimates that each dollar retained in an urban area will be re-spent three times. This multiplier effect results in a three-fold increase in the economic benefits of funds invested in energy-efficiency, without even considering the savings from lower overall fuel costs.

For more information contact the Rebuild America Clearinghouse at 252-459-4664 or visit www.rebuild.gov

Rebuild America
U.S. Dept. of Energy

APPENDIX II - ELECTRIC UTILITY RATE SCHEDULE

6.1.1.1.3 SECONDARY SERVICE GREATER THAN 10 KVA

AVAILABILITY

This schedule is applicable to Delivery Service for non-residential purposes at secondary voltage with demand greater than 10 kVA when such Delivery Service is to one Point of Delivery and measured through one Meter.

TYPE OF SERVICE

Delivery Service will be single or three-phase, 60 hertz, at a standard secondary voltage. Delivery Service will be metered using Company's standard Meter provided for this type of Delivery Service. Any Meter other than the standard Meter will be provided at an additional charge and/or will be provided by a Meter Owner other than the Company pursuant to Applicable Legal Authorities. Where Delivery Service of the type desired is not available at the Point of Delivery, additional charges and special contract arrangements may be required prior to Delivery Service being furnished, pursuant to Section 6.1.2.2, Construction Services, in this Tariff.

MONTHLY RATE

I. Transmission and Distribution Charges:

	Standard Class	Subclass Exception	
Customer Charge	$5.27	$0.00	per Retail Customer per Month
Metering Charge			
Non-IDR Metered	$31.86	$17.07	per Retail Customer per Month
IDR Metered	$116.89	$116.89	per Retail Customer per Month
Transmission System Charge			
Non-IDR Metered	$1.1027	$1.1027	per NCP kVA
IDR Metered	$1.4709	$1.4709	per 4CP kVA
Distribution System Charge	$3.118137	$3.118137	per Billing kVA

The following charges are applicable to both the Standard Class and the Subclass Exception

II.	**System Benefit Fund:**	See Rider SBF
III.	**Transition Charge:**	See Schedules TC, TC2, TC3 and SRC
IV.	**Nuclear Decommissioning Charge:**	See Rider NDC
V.	**Transmission Cost Recovery Factor:**	See Rider TCRF

VI.	**Excess Mitigation Credit:**		Not Applicable
VII.	**State Colleges and Universities Discount:**		See Rider SCUD
VIII.	**Competition Transition Charge:**		See Rider CTC
IX.	**Competitive Metering Credit:**		See Rider CMC
X.	**Other Charges or Credits:**		
	A. Municipal Account Franchise Credit (see application and explanation below)	$(.002207)	per kWh
	B. Rate Case Expenses Surcharge		See Rider RCE
	C. Rider UCOS Retail Credit		See Rider RURC
	D. Advanced Metering System Surcharge		See Rider AMS
	E. Accumulated Deferred Federal Income Tax Credit		See Rider ADFITC

COMPANY SPECIFIC APPLICATIONS

DETERMINATION OF BILLING DEMAND FOR TRANSMISSION SYSTEM CHARGES

Determination of NCP kVA The NCP kVA applicable under the Monthly Rate section shall be the kVA supplied during the 15 minute period of maximum use during the billing month.

Determination of 4 CP kVA The 4 CP kVA applicable under the Monthly Rate section shall be the average of the Retail Customer's integrated 15 minute demands at the time of the monthly ERCOT system 15 minute peak demand for the months of June, July, August and September of the previous calendar year. The Retail Customer's average 4CP demand will be updated effective on January 1 of each calendar year and remain fixed throughout the calendar year. Retail Customers without previous

history on which to determine their 4 CP kVA will be billed at the applicable NCP rate under the "Transmission System Charge" using the Retail Customer's NCP kVA.

DETERMINATION OF BILLING DEMAND FOR DISTRIBUTION SYSTEM CHARGES

Determination of Billing kVA The Billing kVA applicable to the Distribution System Charge shall be the higher of the NCP kVA for the current billing month or 80% of the highest monthly NCP kVA established in the 11 months preceding the current billing month (80% ratchet). The 80% ratchet shall not apply to seasonal agricultural Retail Customers.

OTHER PROVISIONS

Secondary Service Greater Than 10 kVA. This Rate Schedule is applicable only to Retail Customers whose peak demand for the current month is greater than 10 kVA, as measured in the fifteen minute period of highest demand, or whose peak demand exceeded 10 kVA in any of the previous eleven months, and that otherwise qualify under this Rate. This Rate Schedule is applicable to Delivery Service provided for Electric Power and Energy supplied by Retail Customer's REP for Temporary service subject to provisions of Section 6.1.2.2, Construction Services. The Electric Power and Energy delivered may not be re-metered or sub-metered by the Retail Customer for resale except pursuant to lawful sub-metering regulations of Applicable Legal Authorities. Retail Customer's previous metered usage under this or any other Rate Schedule will be used, as needed, in determining the billing determinants under the Monthly Rate section.

Subclass Exception. The Subclass Exception is applicable only to Retail Customers who otherwise qualify for the Secondary Service Greater Than 10 kVA rate schedule and either: (1) whose highest NCP kVa for the most recent 12 months is equal to or less than 50 kVA; or (2) whose highest NCP kVa for the most recent 12 months is greater than 50 kVA but less than or equal to 400 kVA and whose load factor was less than or equal to 10% for each of the most recent 12 months. The most recent 12 months ends with and includes the current month. The monthly load factor is determined as follows:

load factor = billing kWh for the month/ (NCP kVA X number of days in billing period X 24)

Service Voltages. Company's standard service voltages are described in 6.2.2, Standard Voltages and in the Company's Service Standards.

Municipal Account Franchise Credit. A credit equal to the amount of franchise fees included in the Transmission and Distribution Charges will be applied to municipal accounts receiving service within the incorporated limits of such municipality which imposes a municipal franchise fee upon the Company based on the kWh delivered within that municipality and who have signed an appropriate Franchise Agreement.

CenterPoint Energy Houston Electric, LLC
Applicable: Entire Service Area

CNP 8017

Adjustment To The Charges Applied To Retail Customer's Demand Measurement If data to determine the Retail Customer's *Demand Measurement* becomes no longer available, the Company will determine a *Conversion Factor* which will be used as an adjustment to all per unit charges that will then be applied to the *New Demand Measurement*. *Demand Measurement* shall include the Billing kVA, the 4 CP kVA, NCP kVA or any other demand measurement required for billing under this Rate Schedule or any applicable rider(s) or any other applicable schedule(s). *New Demand Measurement* shall be the billing determinants which replace the *Demand Measurement*. The *Conversion Factor* will apply to unit prices per kVA such that when applied to the *New Demand Measurement*, the revenue derived by the Company under demand based charges shall be unaffected by such lack of data.

This adjustment may become necessary because of changes in metering capabilities, such as, Meters that record and /or measure kW with no ability to determine kVA or Meters which meter data in intervals other than 15 minutes. This adjustment also may become necessary due to changes in rules, laws, procedures or other directives which might dictate or recommend that Electric Power and Energy, electric power related transactions, wire charges, nonbypassable charges and/or other transactions measure demand in a way that is inconsistent with the definitions and procedures stated in the Company's Tariff. This adjustment is applicable not only in the instances enumerated above but also for any and all other changes in *Demand Measurement* which would prevent the Company from obtaining the necessary data to determine the kVA quantities defined in this Rate Schedule, applicable Riders and other applicable schedules.

The Conversion Factor shall render the Company revenue neutral to any change in *Demand Measurement* as described above.

NOTICE
This Rate Schedule is subject to the Company's Tariff and Applicable Legal Authorities.

APPENDIX IV - PRELIMINARY ENERGY ASSESSMENT SERVICE AGREEMENT

OFFICE OF THE COMPTROLLER TEXAS

SECO
State Energy Conservation Office

Public Schools, Colleges and Non-Profit Hospitals

Preliminary Energy Assessment
Service Agreement

Investing in our public schools, colleges and non-profit hospitals through improved energy efficiency in public buildings is a win-win opportunity for our communities and the state. Energy-efficient buildings reduce energy costs, increase available capital, spur economic growth, and improve working and living environments. The Preliminary Energy Assessment Service provides a viable strategy to achieve these goals.

Description of the Service

The State Energy Conservation Office (SECO) will analyze electric, gas and other utility data and work with Cypress Fairbanks ISD, hereinafter referred to as Partner, to identify energy cost-savings potential. To achieve this potential, SECO and Partner have agreed to work together to complete an energy assessment of mutually selected facilities.

SECO agrees to provide this service at no cost to the Partner with the understanding that the Partner is ready and willing to consider implementing the energy savings recommendations.

Principles of the Agreement

Specific responsibilities of the Partner and SECO in this agreement are listed below.

- ✓ Partner will select a contact person to work with SECO and its designated contractor to establish an Energy Policy and set realistic energy efficiency goals.
- ✓ SECO's contractor will go on site to provide walk through assessments of selected facilities. SECO will provide a report which identifies no cost/low cost recommendations, Capital Retrofit Projects, and potential sources of funding. Portions of this report may be posted on the SECO website.
- ✓ Partner will schedule a time for SECO's contractor to make a presentation of the assessment findings key decision makers.

Acceptance of Agreement

This agreement should be signed by your organization's chief executive officer or other upper management staff.

Signature: _____ Date: 1/26/10

Name (Mr./Ms./Dr.) Roy Sprague AIA,CSI,REFP Title: Assistant Superintendent of Facilities & Construction

Organization: Cypress Fairbanks ISD Phone: 281-897-4057

Street Address: 11430 Perry Rd., Houston, TX Fax: 281-897-3806

Mailing Address: Same E-Mail: roy.sprague@cfisd.net

County: Harris

Contact Information:

Name (Mr./~~Ms./Dr.~~): Glen Rhoden Title: Energy Manager

Phone: 281-807-8918 Fax: 281-897-3806

E-Mail: henry.rhoden@cfisd.net County: Harris

Please sign and mail or fax to: Juline Ferris, **Schools and Education** Program Administrator, State Energy Conservation Office, 111 E. 17th Street, Austin, Texas 78774. Phone: 512-936-9283. **Fax 512-475-2569.**

APPENDIX V - TEXAS ENERGY MANAGERS ASSOCIATION (TEMA)

ANNOUNCING!

TEMA

TEXAS ENERGY MANAGERS ASSOCIATION

A PROFESSIONAL ASSOCIATION FOR THOSE RESPONSIBLE FOR ENERGY MANAGEMENT IN TEXAS PUBLIC FACILITIES

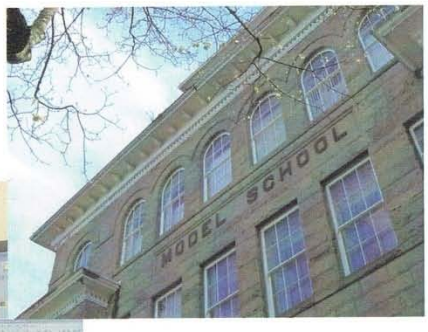

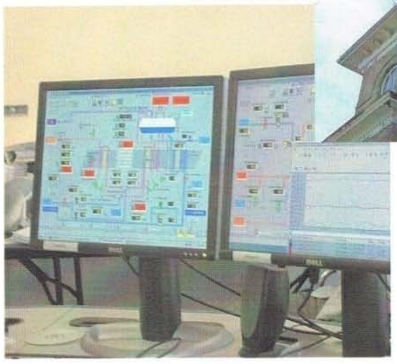

- Networking
- Sharing Knowledge and Resources
- Training Workshops
- Regional Meetings
- Annual Conference
- Certification
- Legislative Updates
- Money-Saving Opportunities

WWW.TEXASEMA.ORG

Check the website for Membership and Association information.

SECO
State Energy Conservation Office